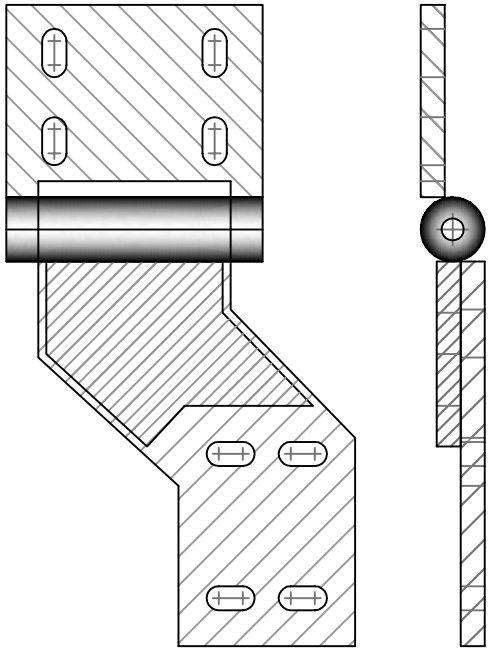

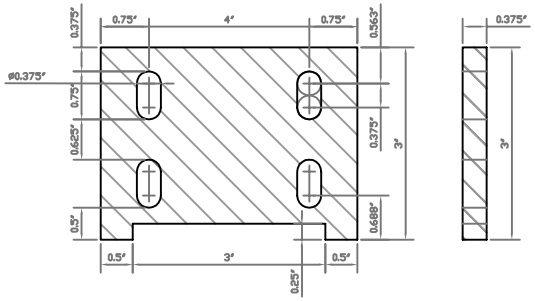


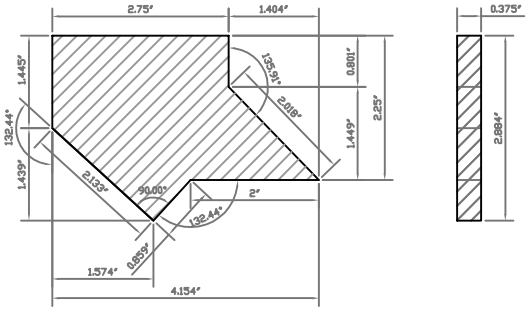


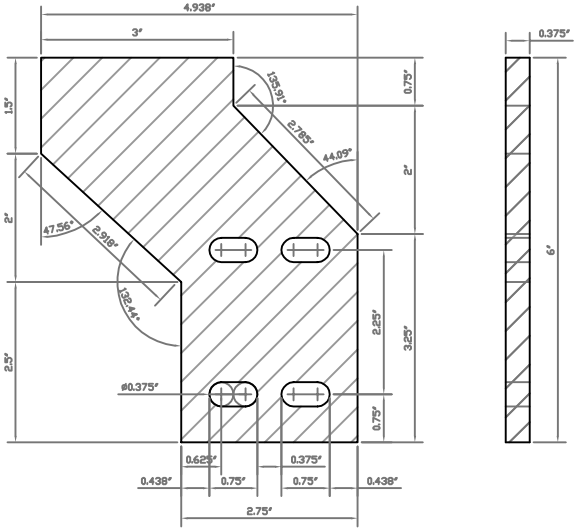


| REV. | DESCRIPTION | BY | DATE |
|---|---|---|---|
| | | | |

| | | | |
|---|---|---|---|
| TITLE: | DOOR HINGE | | |
| DRAWING NO. | 100000-0 | | SHEET |
| DRAWN | J.KOMOR | 21 MAY 10 | JERRY KOMOR |
| CHECKED | J.KOMOR | 21 MAY 10 | SHEETER PROJECT |
| ENGINEER | J.KOMOR | 21 MAY 10 | |
| APPROVED | J.KOMOR | 21 MAY 10 | |

SIZE: A